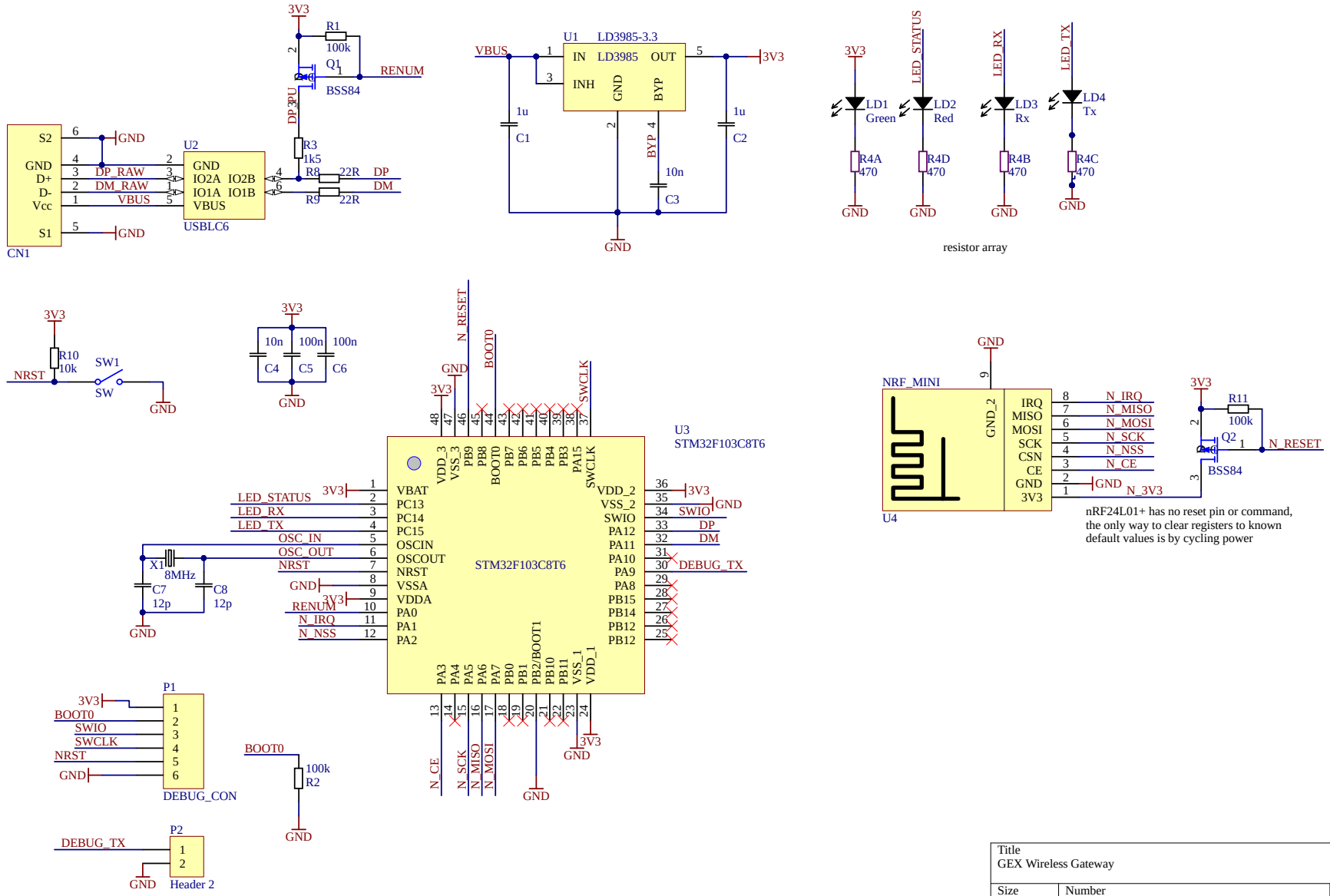

Title	GEX Wireless Gateway	
Size	Number	Revision
A4		1
Date:	19. 5. 2018	Sheet of
File:	D:\GEX\GEX_Radio\GEX_Radio.SchDoc	Drawn By: MightyPork